ANSSION
PNEUMATIC &HYDRAULIC

Air Filter / Regulator
Series SFR

Symbol

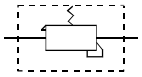

◆ How to Order

SFR – 200

Port size

200	1/4	**300**	3/8
400	1/2		

Air Filter / Regulator

SFR	S Series

◆ Operation indication

Fuelling under the condition of non-stop

◆ Specifications

Model	SFR-200	SFR-300	SFR-400
Adapter diameter	1/4	3/8	1/2
Press meter diameter	1/8	1/8	1/8
Proof pressure	1.5 MPa		
Max.operating pressure	1.0 MPa		
Ambient and fluid temperature	5~60℃		

◆ Dimensions

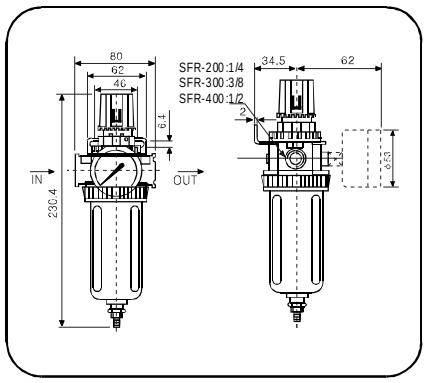

Lubricator
Series SL

Symbol

◆ How to Order

SFL – 200

Port size

200	1/4	**300**	3/8
400	1/2		

Lubricator

SFL	S Series

◆ Specifications

Model	SL-200	SL-300	SL-400
Adapter diameter	1/4	3/8	1/2
Proof pressure	1.5 MPa		
Max.operating pressure	1.0 MPa		
Ambient and fluid temperature	5~60℃		
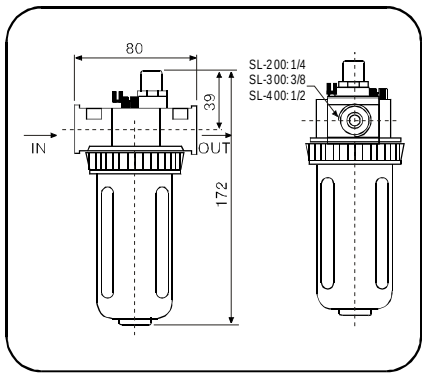
◆ Dimensions